JGC0175

www.ledidea.com
IDEA, Inc.

The 0175 series lamps are miniature lens type designed for surface mounting. These lamps are of the so-called 0805 size and measure approximately 1.25 x 2.0 mm.

RoHS Compliant
Aug 2004

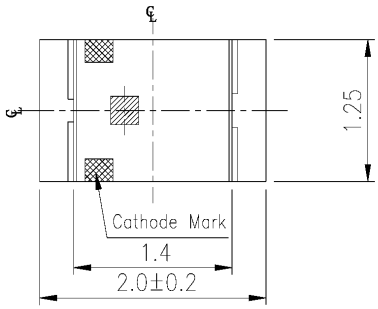

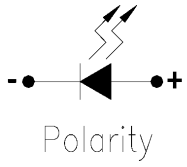

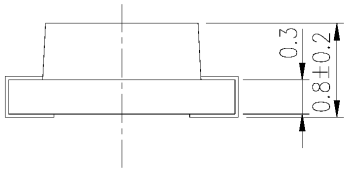

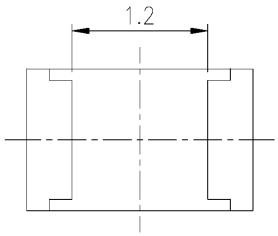

For reflow soldering (propose)

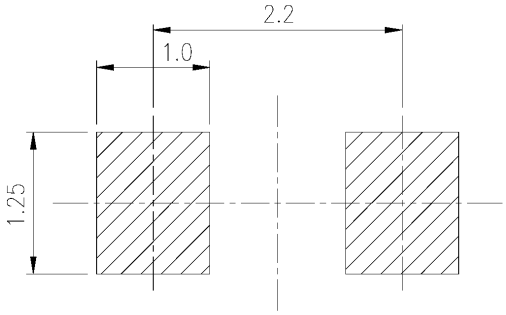

PART NO.	Chip		Lens Color
	Material	Emitted Color	
JGC0175	AlGaInP	Super Yellow Green	Water Clear

* Specifications subject to change without notice. Dimensions are in mm ±0.1 unless stated otherwise.

www.ledidea.com
IDEA, Inc.

Absolute Maximum Ratings at T_a = 25 ˚C

Parameter	Symbol	Rating	Units
Forward Current	I_F	25	mA
Reverse Voltage	V_R	5	V
Operating Temperature	T_{opr}	-40 to +85	˚C
Storage Temperature	T_{stg}	-40 to +90	˚C
Electrostatic Discharge	ESD	2000	V
Power Dissipation	P_d	60	mW
Peak Forward Current (Duty 1/10 @ 1KHz)	I_{FP}	60	mA
Soldering Temperature	T_{sol}	260 (for 5 seconds)	˚C

Electronic Optical Characteristics (T_a = 25 ˚C)

Parameter	Symbol	Min.	Typ.	Max.	Units	Condition
Luminous Intensity	I_V	9	13	—	mcd	I_F = 20 mA
Viewing Angle	$2\theta_{1/2}$	—	130	—	deg	I_F = 20 mA
Peak Wavelength	λ_p	—	575	—	nm	I_F = 20 mA
Dominant Wavelength	λ_d	—	573	—	nm	I_F = 20 mA
Spectrum Radiation Bandwidth	$\Delta\lambda$	—	20	—	nm	I_F = 20 mA
Forward Voltage	V_F	—	2.0	2.4	V	I_F = 20 mA
Reverse Current	I_R	—	—	10	μA	V_R = 5 V

* Specifications subject to change without notice. Dimensions are in mm ±0.1 unless stated otherwise.